Indeterminate

- Deformation of Statically ~~Intedterminat~~ Structures :
- "Reduction Theory" Theorem :

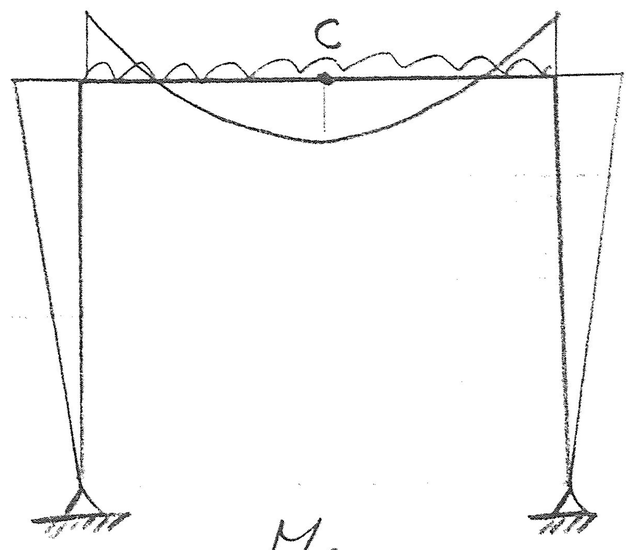

M_f

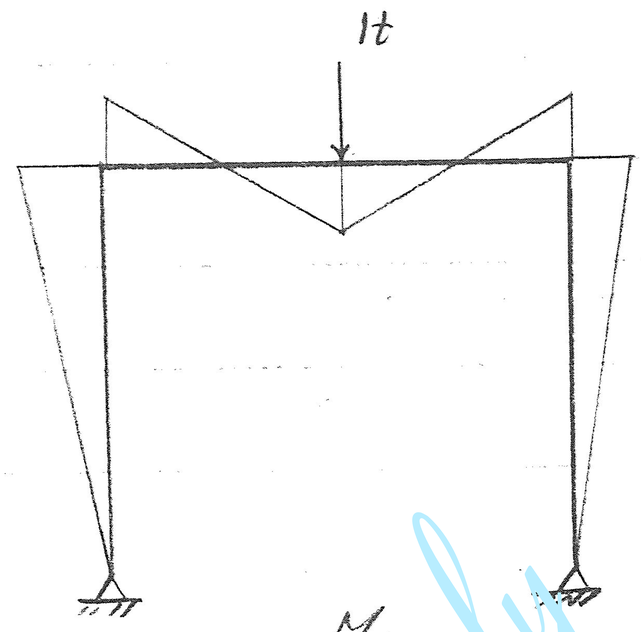

M_{f_1}

Find vertical deflection at C?

$$\delta_C = \int \frac{M_f M_{f_1}}{EI} dl \quad \text{"principle of virtual work"}$$

$$M_f = M_0 + X_1 M_1$$
$$M_{f_1} = \bar{M}_0 + \bar{X}_1 M_1$$

to Solve

M_f M_0 M_1

$$X_1 = -\frac{\delta_{10}}{\delta_{11}} = -\frac{\int \frac{M_0 M_1 dl}{EI}}{\int \frac{M_1 M_1 dl}{EI}}$$

to Solve

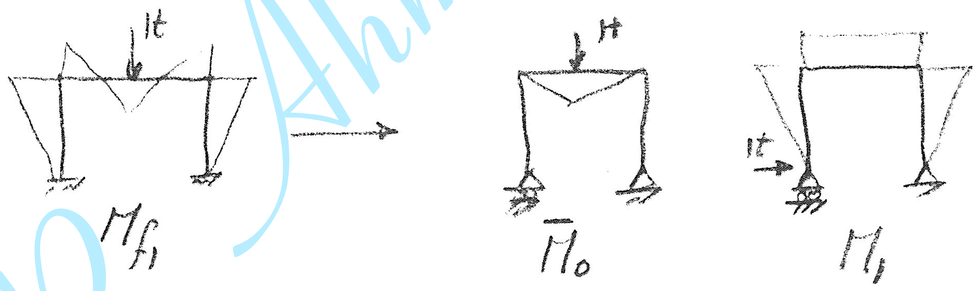

M_{f_1} $\bar{M}_0$ M_1

$$\bar{X}_1 = -\frac{\delta'_{10}}{\delta_{11}} = -\frac{\int \frac{M'_0 M_1 dl}{EI}}{\int \frac{M_1^2}{EI} dl}$$

$$\delta_C = \int \frac{M_f M_{f_1}}{EI} dl$$

$$= \frac{1}{EI}\left[\int M_f (\bar{M}_0 + \bar{X}_1 M_1)\, dl\right]$$

$$= \frac{1}{EI}\left[\underline{\int M_f \bar{M}_0 dl} + \bar{X}_1 \int M_f M_1 dl\right]$$

$$= \frac{1}{EI}\left[\underline{\int M_f \bar{M}_0 dl} + \bar{X}_1 \int (M_0 + X_1 M_1) M_1 dl\right]$$

$$= \frac{1}{EI}\left[\underline{\int M_f \bar{M}_0 dl} + \bar{X}_1 \left(\int M_0 M_1 dl + X_1 \int M_1^2 dl\right)\right]$$

$$= \frac{M_f \bar{M}_0}{EI} dl - \frac{\delta'_{10}}{\delta_{11}}\left(\delta_{10} - \frac{\delta_{10}}{\delta_{11}} \delta_{11}\right)$$

$$= \frac{M_f \bar{M}_0}{EI} dl - \frac{\delta'_{10}}{\delta_{11}}\left(\cancel{\delta_{10}}^{\,0} - \delta_{10}\right)$$

$$\boxed{\delta_C = \frac{M_f \bar{M}_0}{EI} dl = \frac{M_0 M_{f_1}}{EI} dl}$$

Dr. Ahmed M. El-Kholy

"Reduction Theory"

When we evaluate the integral $\delta_c = \int \frac{M_f M_{f_1}}{EI} dl$, we need only one diagram of B.M.D.'s (M_f or M_{f_1}) to be for the statically indeterminate system while the other diagram can be for any chosen statically determinate system.

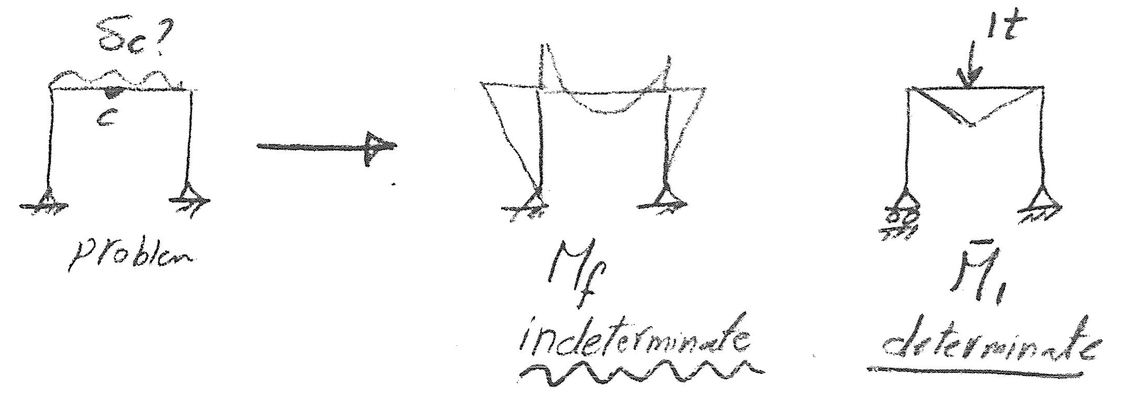

$$\delta_c = \int \frac{M_f \bar{M}_1}{EI} dl$$

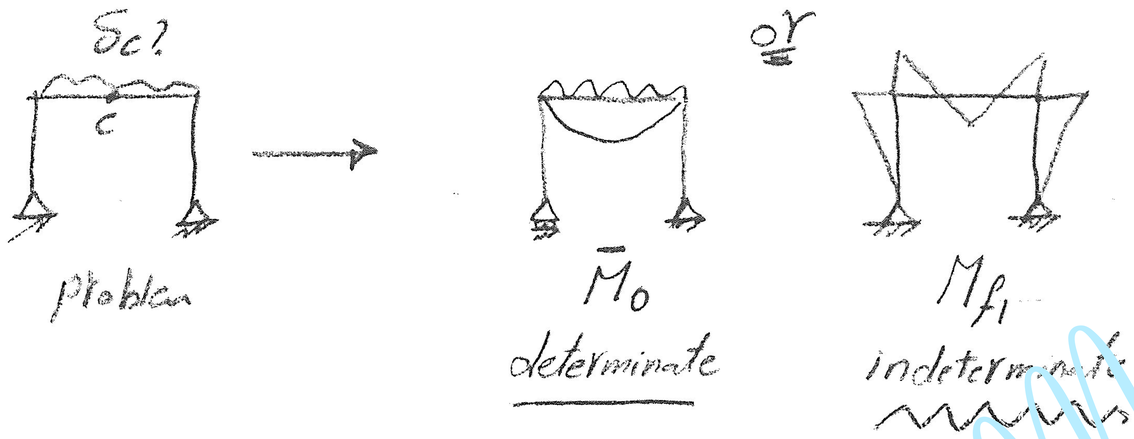

$$\delta_c = \int \frac{\bar{M}_0 M_{f_1}}{EI} dl$$

Example 1

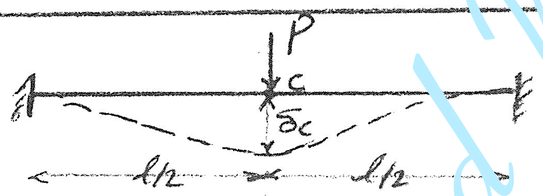

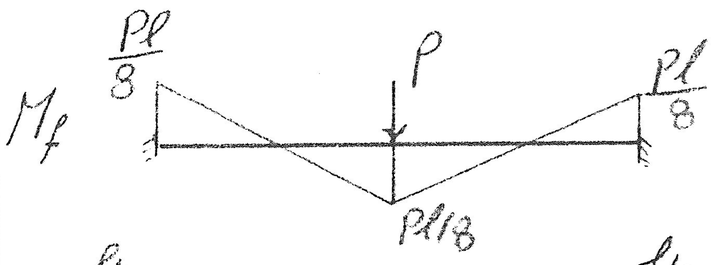

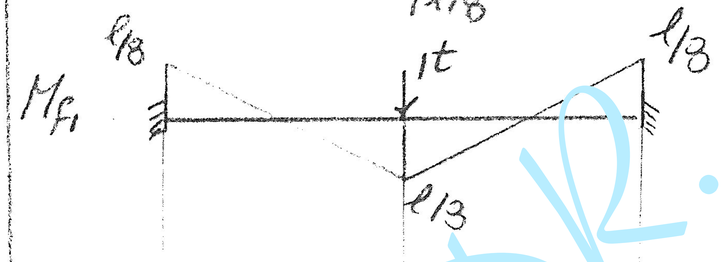

$$\delta_c = \int \frac{M_f M_{f_1}}{EI} dl$$

$$= \frac{1}{EI}\left[\frac{2\frac{l}{2}}{6}\left(\frac{2Pl^2}{64}+\frac{2Pl^2}{64}-\frac{Pl^2}{64}-\frac{Pl^2}{64}\right)\right]$$

$$\delta_c = \frac{Pl^3}{192\,EI} \downarrow$$

Reduction theory استعمل لـ
M_f indeterminate
M_{f_1} indeterminate

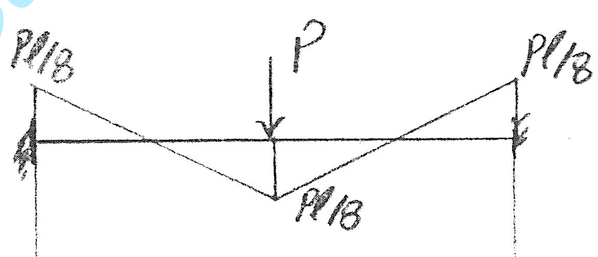

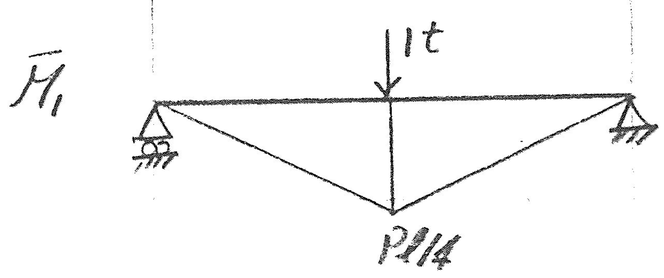

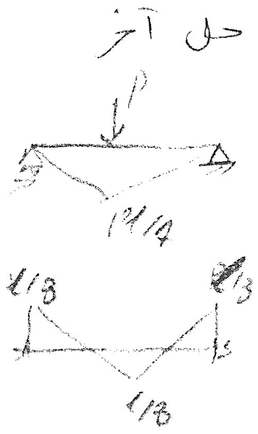

$$\delta_c = \int \frac{M_f \bar{M}_1}{EI} dl$$

$$= \frac{1}{EI}\left[\frac{2\frac{l}{2}}{6}\left(\frac{2Pl^2}{32}-\frac{Pl^2}{32}\right)\right]$$

$$\delta_c = \frac{Pl^3}{192} \downarrow$$

باستعمال
Reduction Theory
يكون رسم M اسهل واجراء التكامل اسهل

M_f indeter.
$\bar{M}_1$ deter.

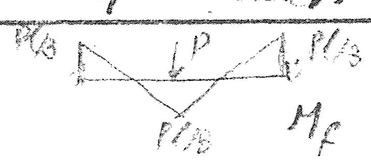

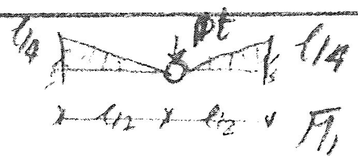

حل آخر

$$\delta_c = \int \frac{M_f \bar{M}_1}{EI} dl$$

Dr. Ahmed M. El-Kholy

Example 2

Caculate the vertical displacement at c using reduction theory.

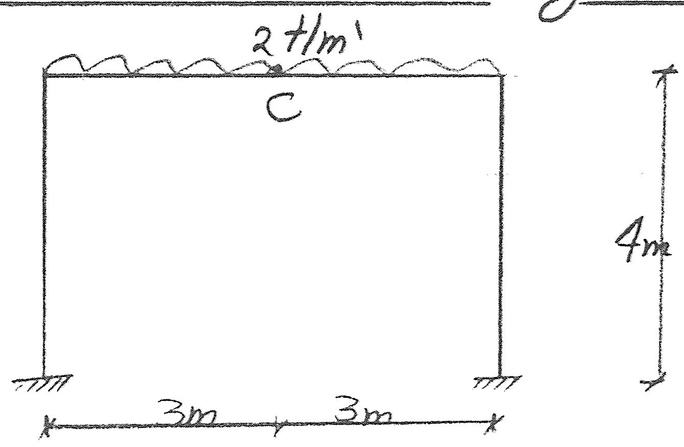

$$\delta_c = \int \frac{M_f \bar{M}_1}{EI} dl$$

To get M_f : use Column analogy method

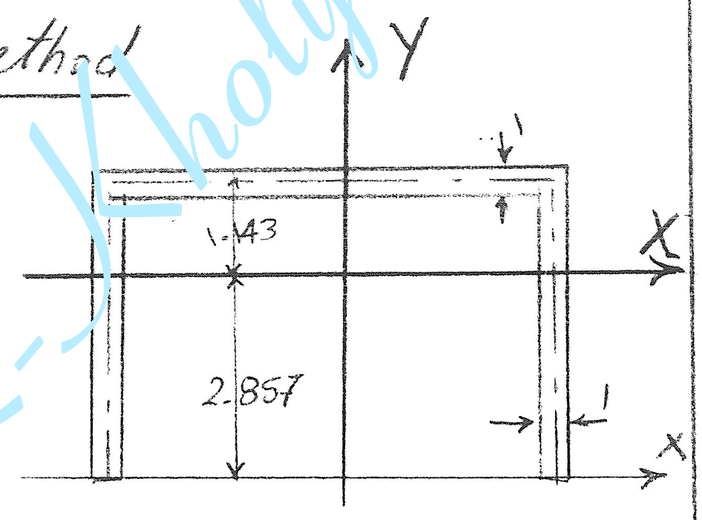

$$\bar{y} = \frac{\Sigma A \bar{y}}{\Sigma A} = \frac{2\times4\times1\times2 + 6\times1\times4}{2\times4\times1 + 6\times1} = 2.857\,m$$

$$A = 14$$

$$I_x = 2\left[\frac{1(4)^3}{12} + 1(4)(0.857)^2\right] + 6\times1\times(1.143)^2 = 24.381$$

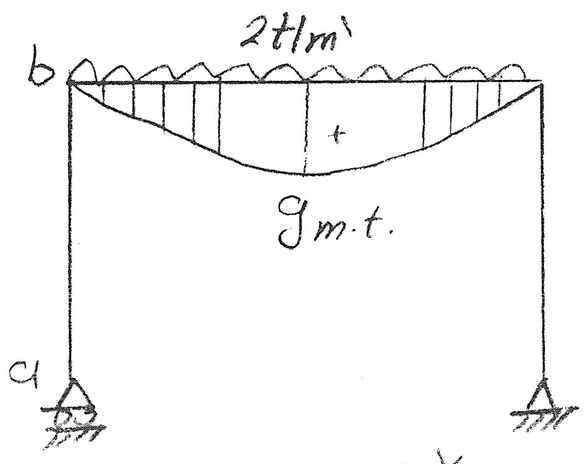

$$N = N_1 = -\frac{2}{3}\times9\times6\times1 = -36$$

$$M_y = 0$$

$$M_x = -36\times1.143 = -41.143$$

$$M_f = M_o + \frac{N}{A} + \frac{M_x}{I_x}\cdot y$$

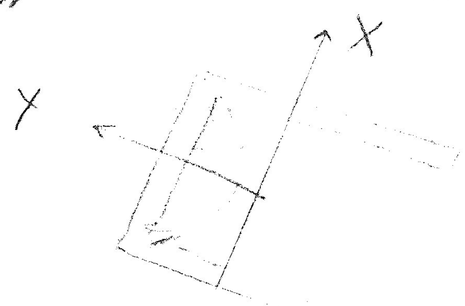

$$M_a = 0 - 2.571 - 1.688\times-2.857 = 2.25\ m.t.$$

$$M_b = 0 - 2.571 - 1.688\times1.143 = -4.50\ m.t$$

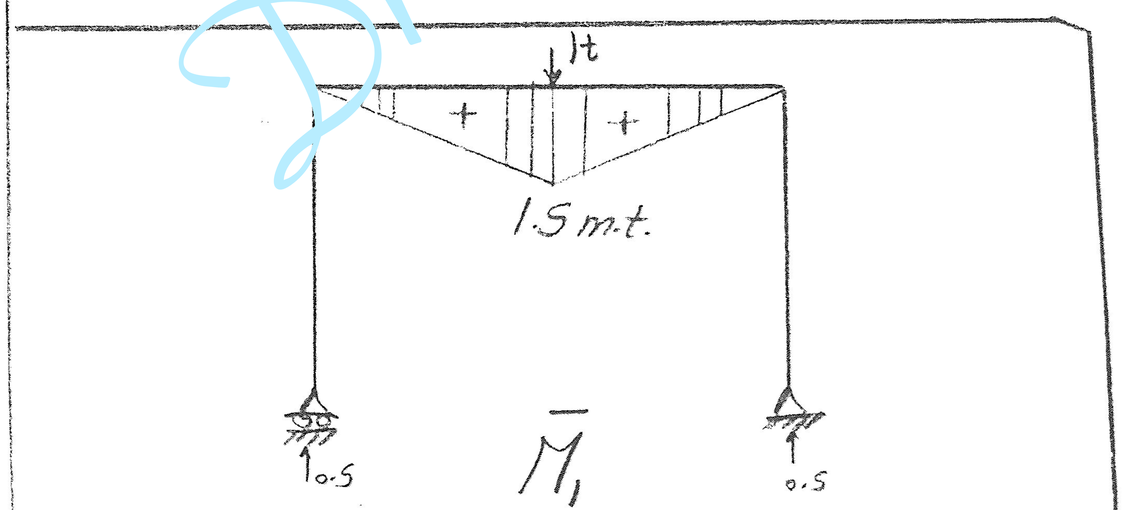

$\bar{M}_1$ on determinate sys.

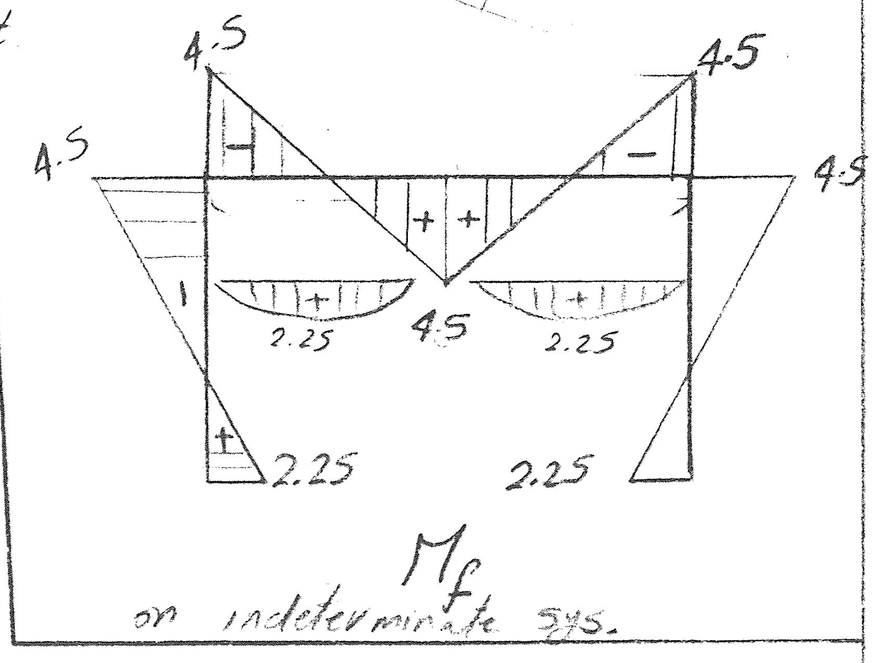

M_f on indeterminate sys.

$$\delta_c = \int \frac{M_f \bar{M}_1}{EI} dl = \frac{2}{EI}\left[\frac{3}{6}(6.75) + \frac{2}{3}\times2.25\times3\times0.75\right]$$

$$\delta_c = \frac{13.5}{EI}$$

Dr. Ahmed M. El-Kholy

Highly Statically Indeterminant Frames :-

Use The Column Analogy + Consistent Deformation + Reduction Theory

Example 3 Draw B.M.D. and Calculate Vertical movement at c?

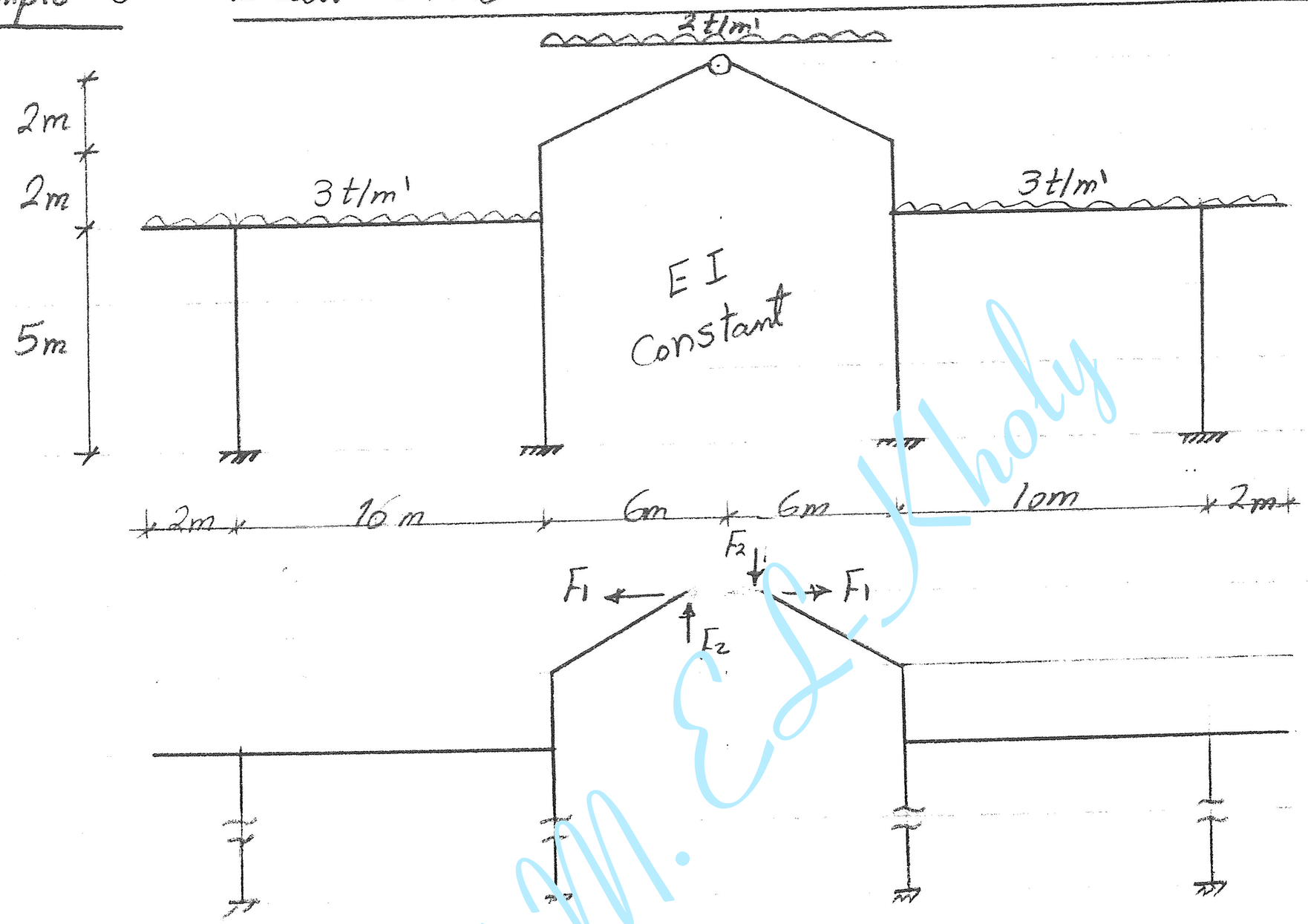

From Symmetry $F_2 = 0$

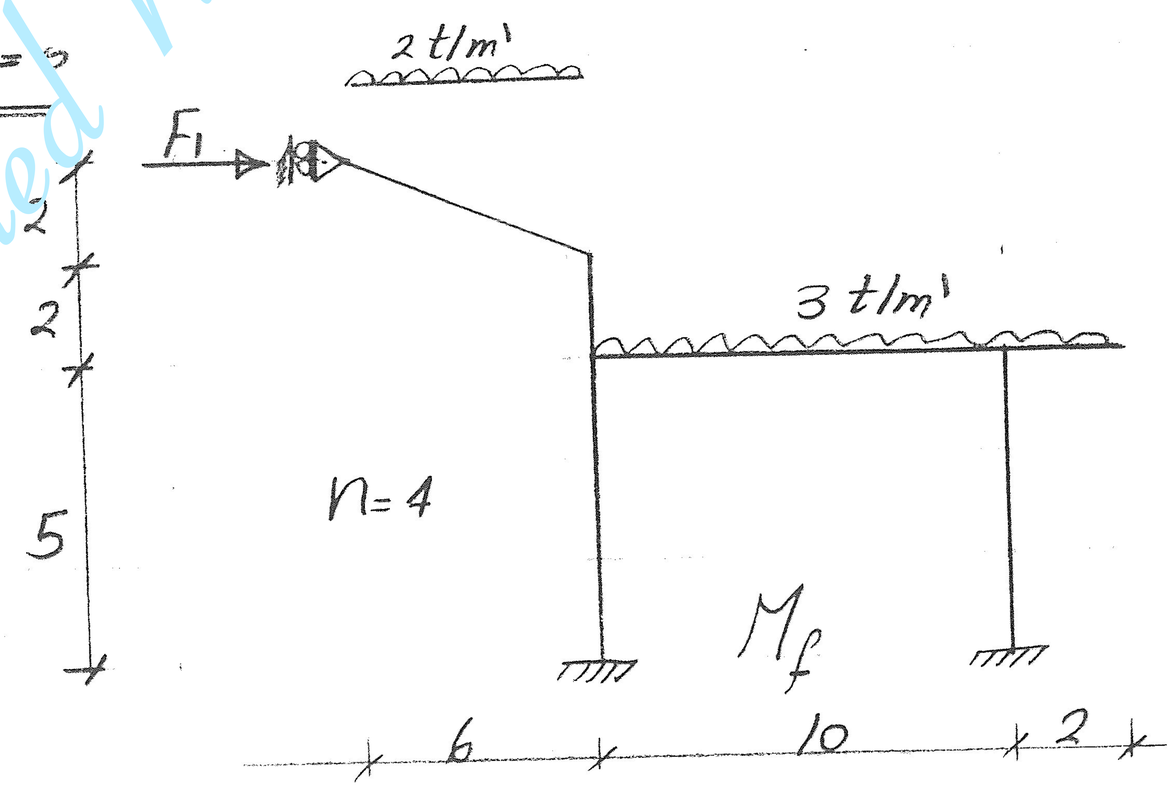

$M_f =$

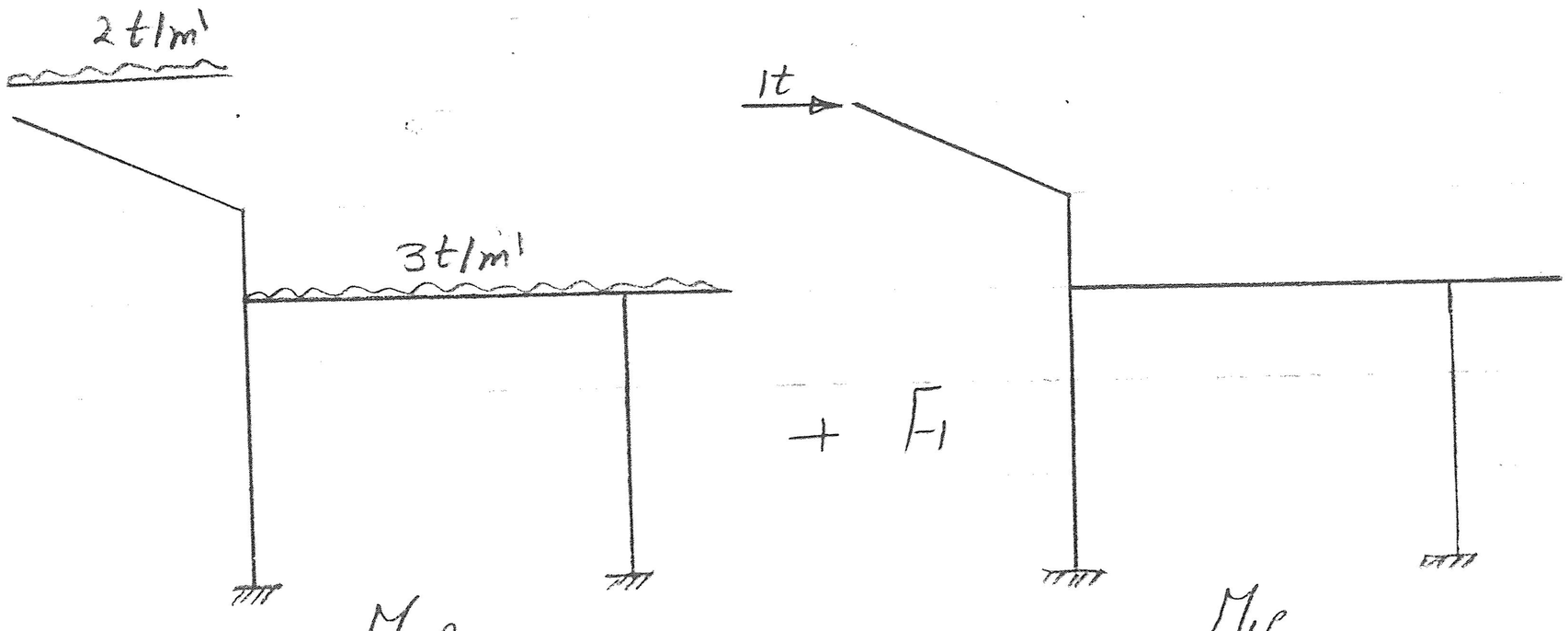

M_{of} M_{1f}

required $= M_f = M_{of}^{?} + F_1^{??} M_{1f}^{?}$ "Consistent Deformation", $F_1 = -\frac{\delta_{10}}{\delta_{11}}$?

DR. Ahmed M. El Kholy

So it's required to calculate M_{of}, M_{1f}, δ_{10}, δ_{11} to get M_f

1. To get M_{of}, use Column Analogy

$A = 2(1)(5) + 10(1) = 20$

$\bar{y} = \frac{\Sigma A \bar{y}}{\Sigma A} = \frac{2(5)(1)(2.5) + 10(1)(5)}{20}$

$\bar{y} = 3.75$ m , $I_x = 52.083$, $I_y = 333.3$

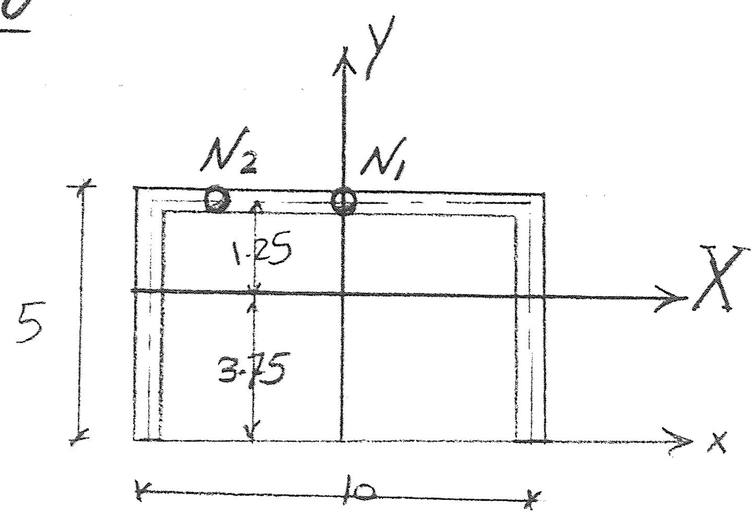

$N_1 = -\frac{2}{3} \times 37.5 \times 10 + 6 \times 10 = -190$

$N_2 = \frac{1}{2} \times 30 \times 10 = 150$

$N = \Sigma N = -40$

$M_x = -40 \times 1.25 = -50$

$M_y = 150 \times -1.667 = -250$

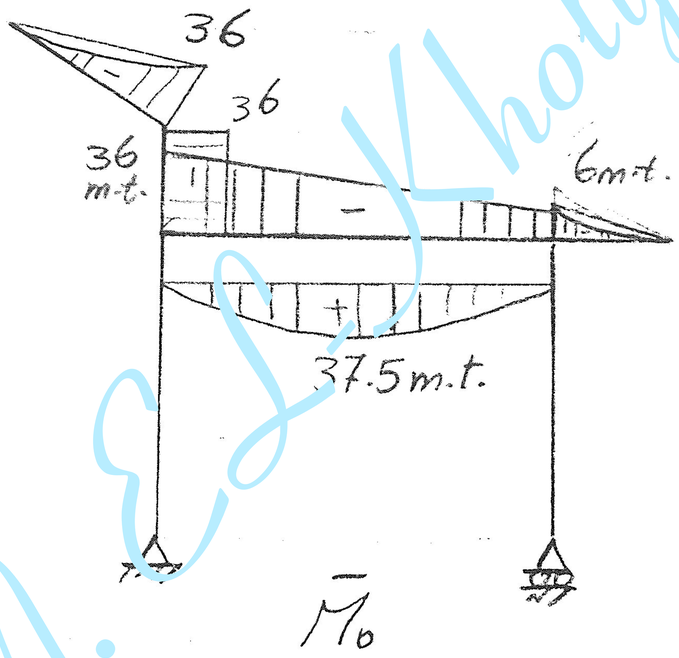

$\bar{M}_o$

$M_{of} = \bar{M}_o + \frac{N}{A} + \frac{M_x}{I_x} y + \frac{M_y}{I_y} x$

$M_{of} = \bar{M}_o - 2 - 0.96y - 0.75X$

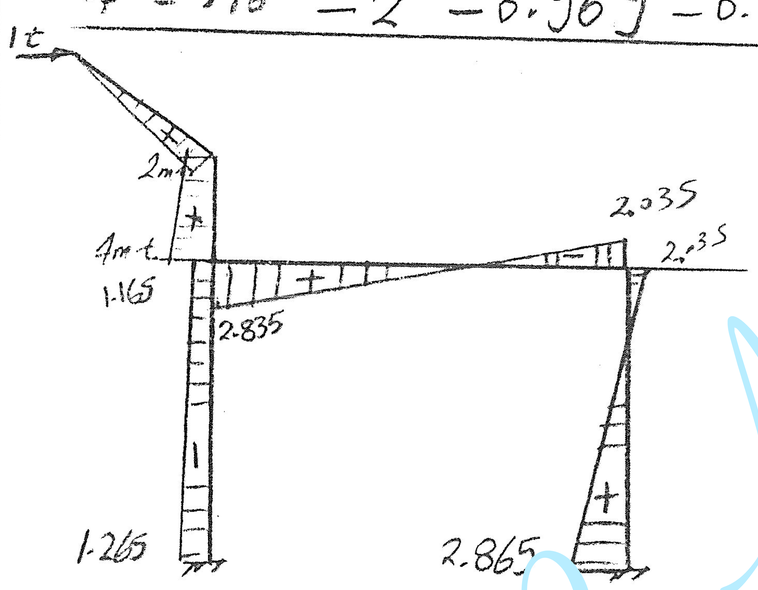

M_{1f}

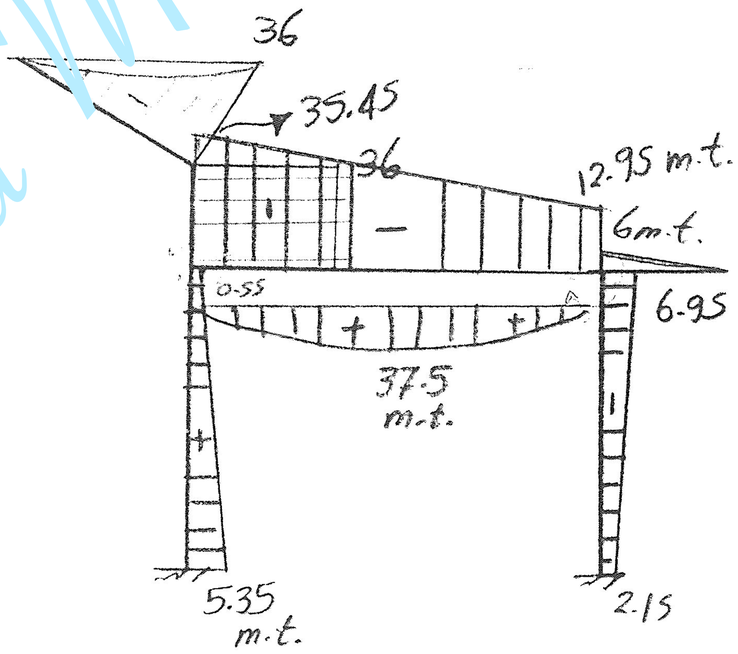

M_{of}

2. To get M_{1f}

$N_1 = -\frac{1}{2} \times 9 \times 10 = -45$

$N_2 = -\frac{1}{2} \times 5 \times 5 = -12.5$

$N = \Sigma N = -57.5$

$M_x = -45 \times 1.25 - 12.5 \times -0.417 = -51.0375$

$M_y = -45 \times -1.67 - 12.5 \times -5 = 137.65$

$M_{1f} = \bar{M}_1 - 2.875 - 0.98y + 0.413X$

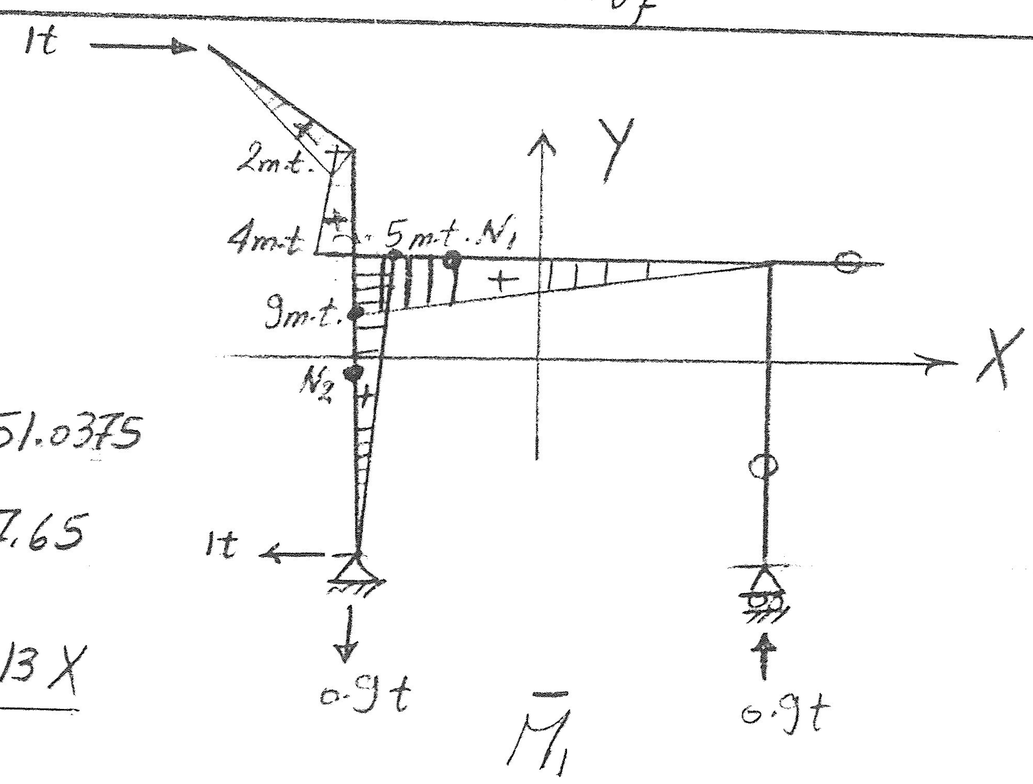

$\bar{M}_1$

Dr. Ahmed M. El-Kholy

$$\delta_{10} = \int \frac{M_{of} M_{1f}}{EI} dl$$ Using reduction theory

$$= \int \frac{M_{of} \bar{M}_1}{EI} dl$$

26.875
-1257.75
1125
-216
-151.79
36

-437.66

$$\delta_{10} = -437.664/EI$$

$$\delta_{11} = \int \frac{M_{1f} M_{1f}}{EI} dl$$ Using reduction

$$= \int \frac{M_{1f} \bar{M}_1}{EI} dl$$

$$\delta_{11} = 66.645/EI \longrightarrow F_1 = -\frac{\delta_{10}}{\delta_{11}} = 6.567$$

$$M_f = M_{of} + F_1 M_{1f}$$

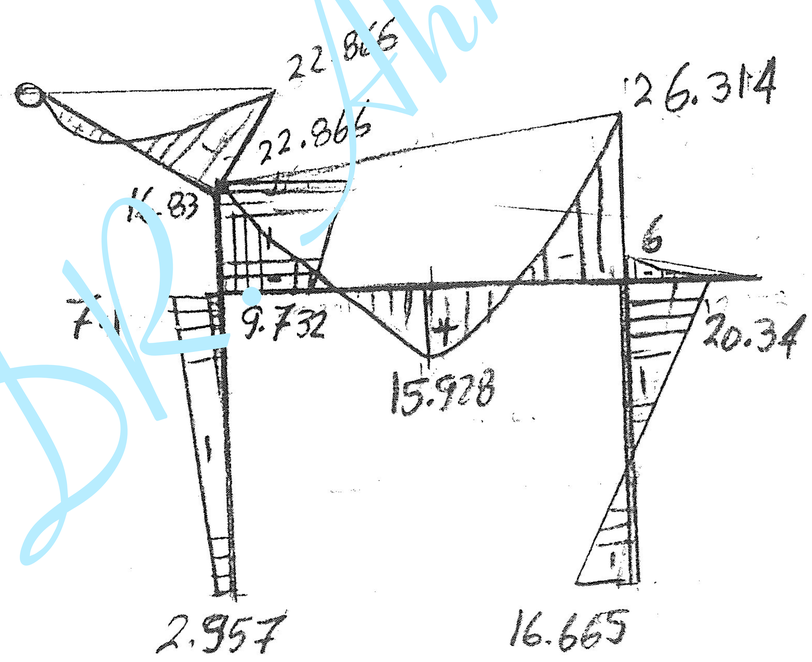

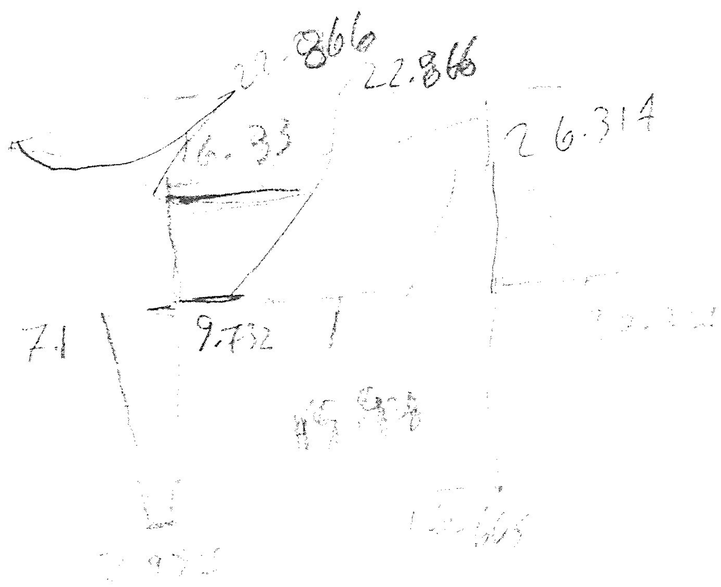

Dr. Ahmed M. El-Kholy

ex. Unsymmetry frame

$\boxed{n = 7}$

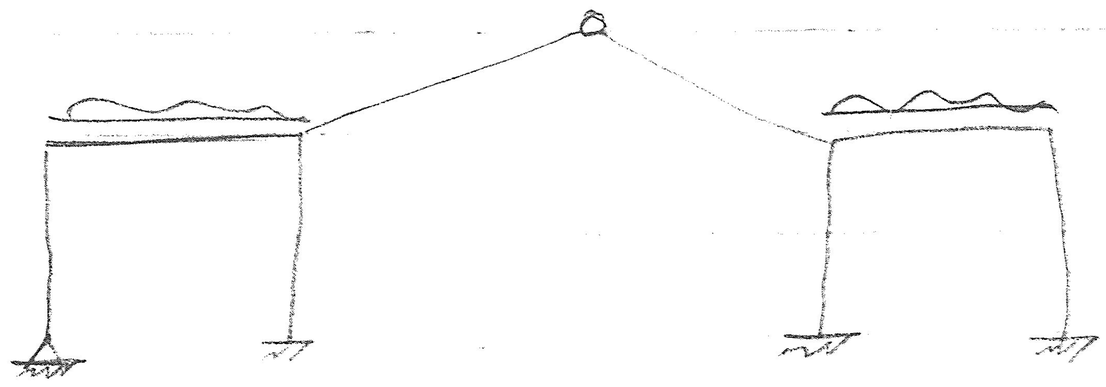

$7 = 11 - 4 = 3+1$

No-Symmetry

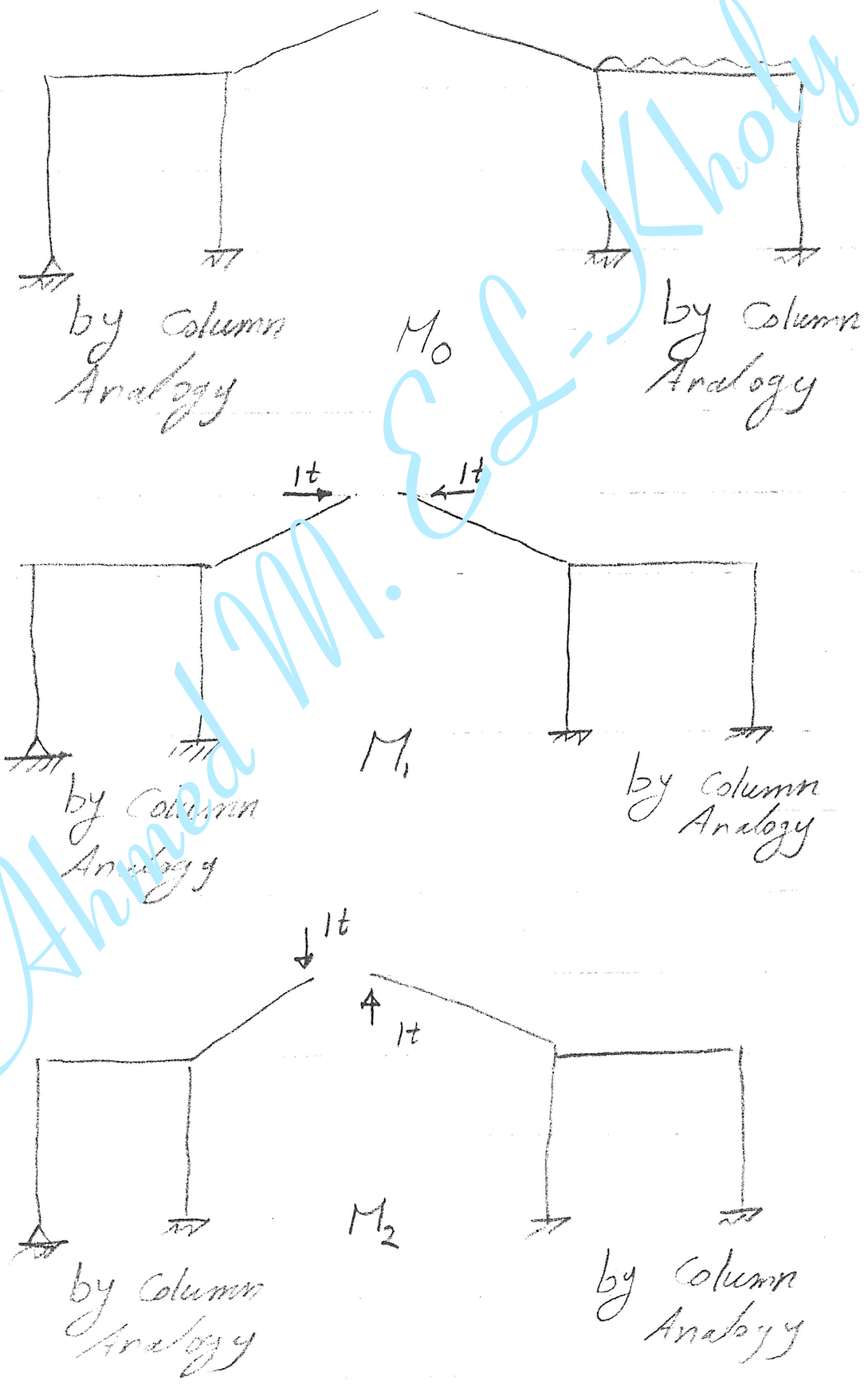

$$\delta_{10} + X_1 \delta_{11} + X_2 \delta_{12} = 0 \quad , \quad \delta_{10} = \int \frac{M_0 \bar{M}_1}{EI} dl \quad , \quad \delta_{11} = \int \frac{M_1 \bar{M}_1}{EI} dl$$

$$\delta_{20} + X_1 \delta_{21} + X_2 \delta_{22} = 0 \quad \delta_{20} = \int \frac{M_0 \bar{M}_2}{EI} dl \quad , \quad \delta_{22} = \int \frac{M_2 \bar{M}_2}{EI} dl$$

$$\delta_{12} = \int \frac{M_1 \bar{M}_2}{EI} dl$$

$$M_f = M_0 + X_1 M_1 + X_2 M_2$$

DR. Ahmed M. E. Kholy