Sheet 2 (G)

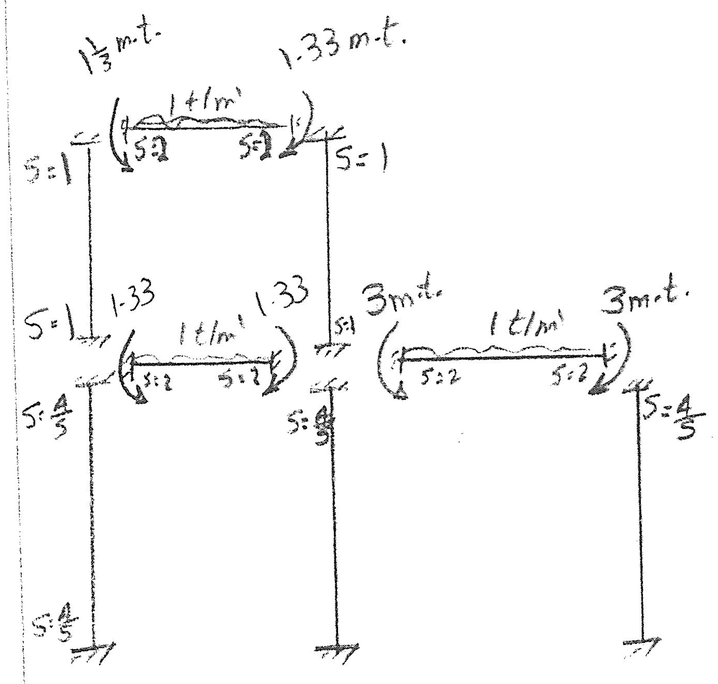

F.E.M. & S × EI

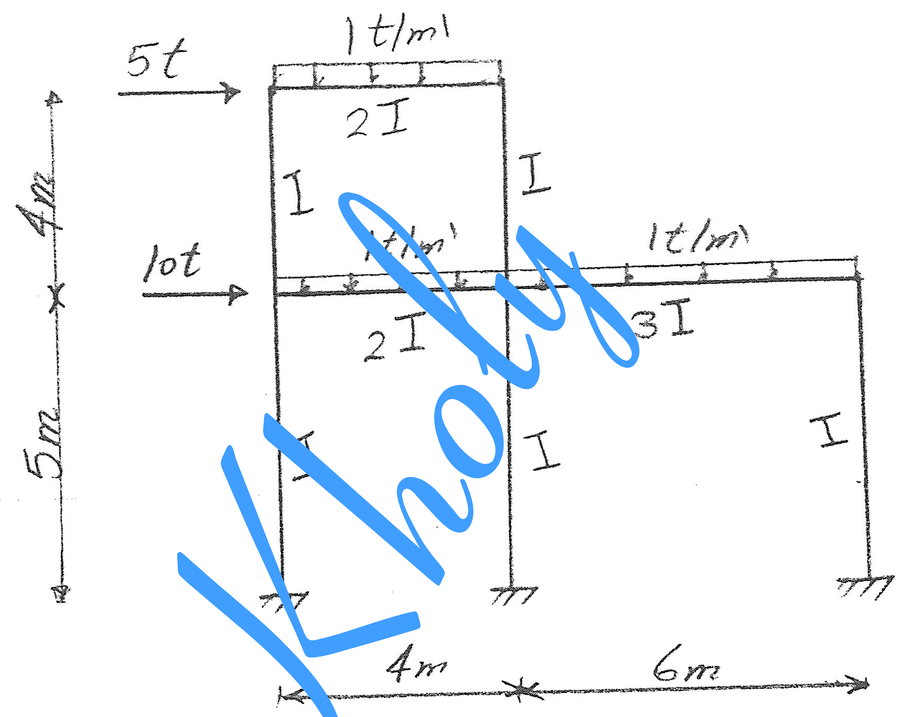

Problem

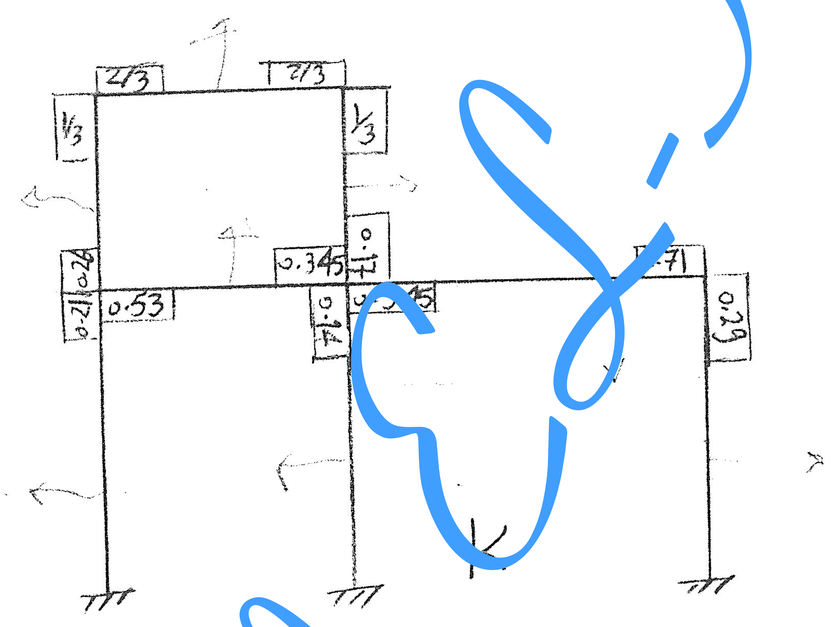

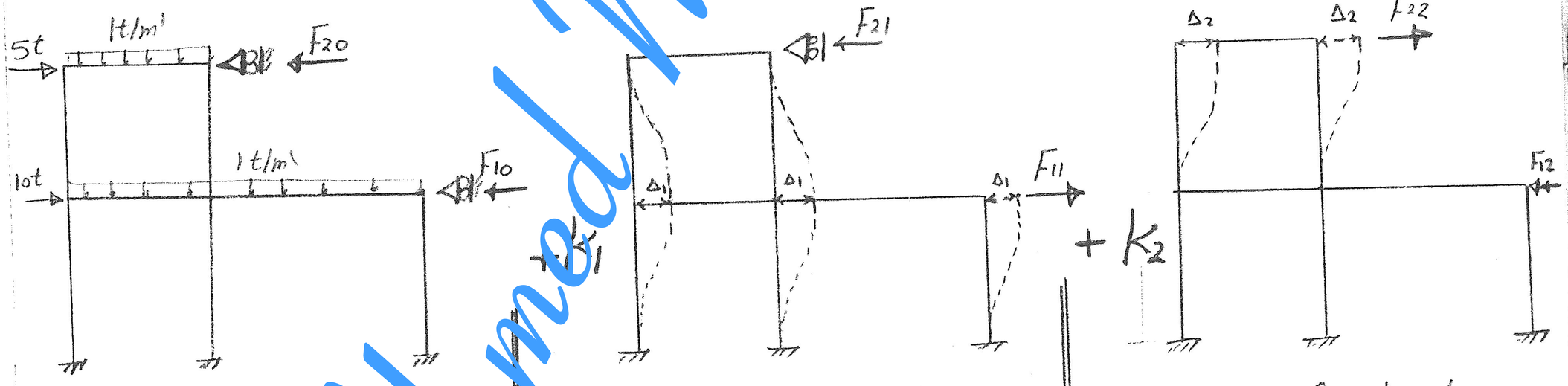

No. Sway Solution $M_{N.S.}$

Δ_1 for level 1 M'_{S_1}

Δ_2 for level 2 M'_{S_2}

$$\boxed{M_{final} = M_{N.S.} + K_1 M'_{S_1} + K_2 M'_{S_2}}$$

to get K_1, K_2

$F_{10} + K_1 F_{11} + K_2 F_{12} = 0 \longrightarrow 1$

$F_{20} + K_1 F_{21} + K_2 F_{22} = 0 \longrightarrow 2$

Solve 1 & 2 $\xrightarrow{\text{get}}$ K_1, K_2

$F_{10} = 10 + \Sigma R_{level_1}$ لدور

$F_{20} = 5 + \Sigma R_{level_2}$ لدور

Ahmed M. El-Kholy

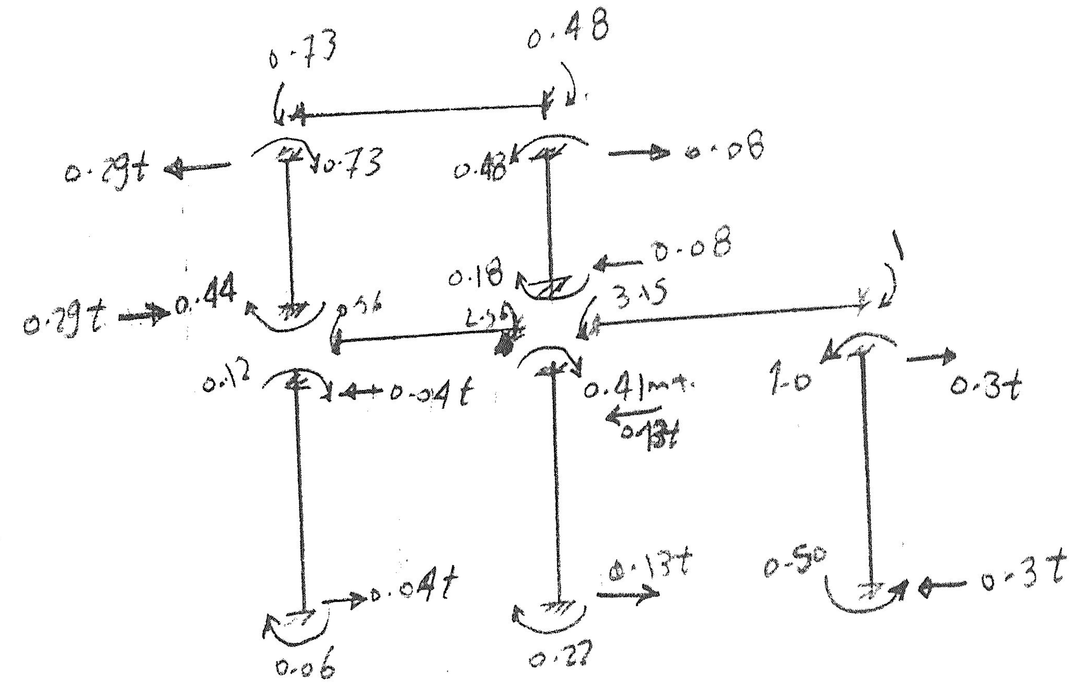

$F_{20} = 0.29 - 0.08 + 5 = 5.2t$

| | | |

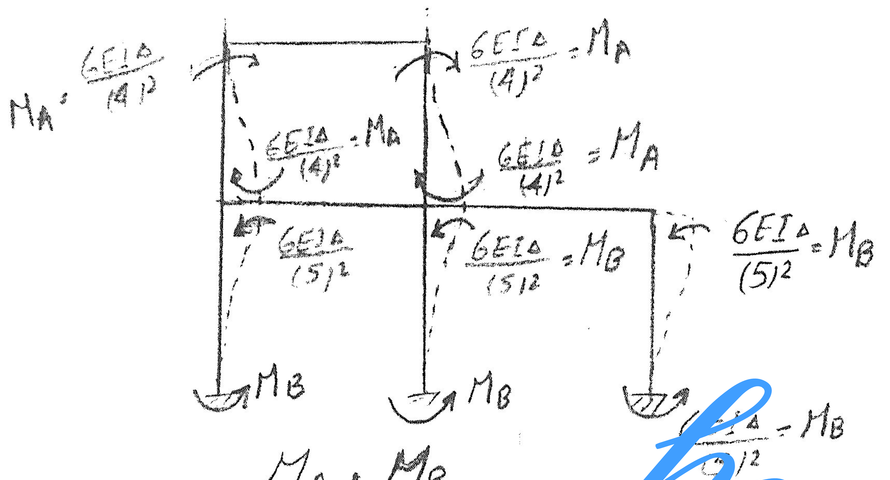

$M_A : M_B$

$0.375 : 0.24$

Assume $M_A = 10$ m.t. $\longrightarrow$ $M_B = 0.4$ m.t.

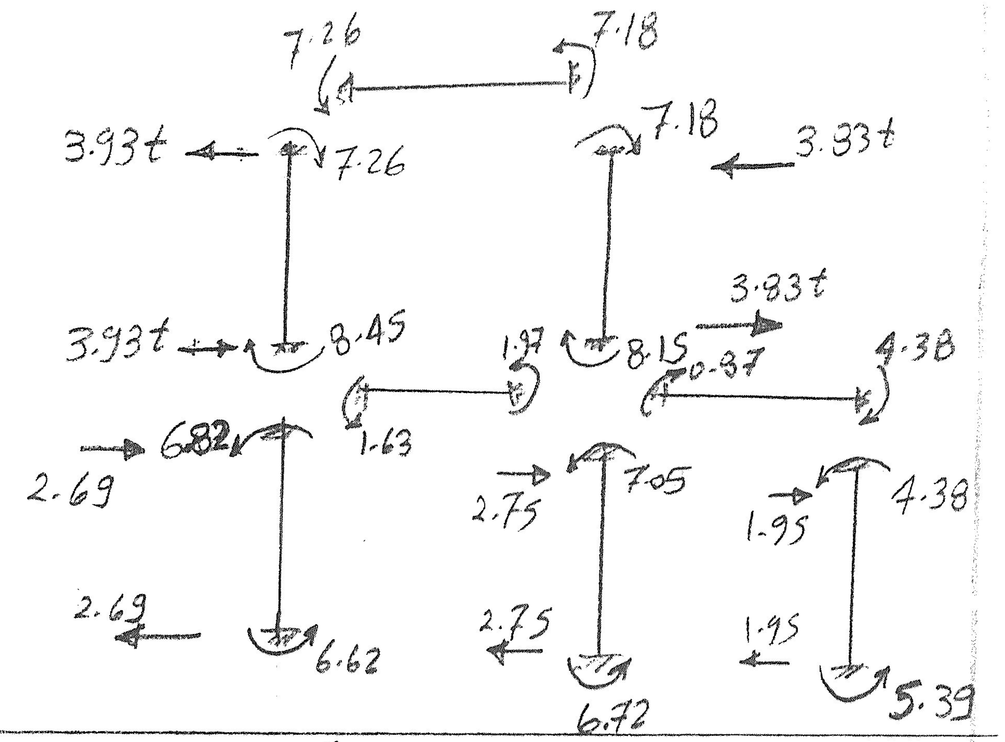

| | | |

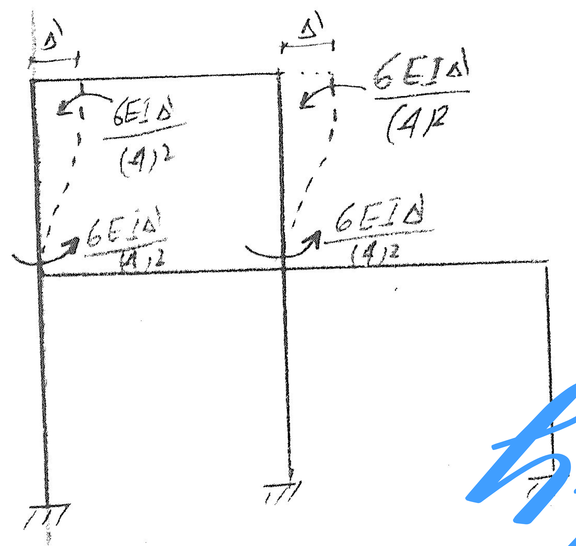

Assume $M_A = \frac{6EI\Delta'}{16} = 10$ m.t.

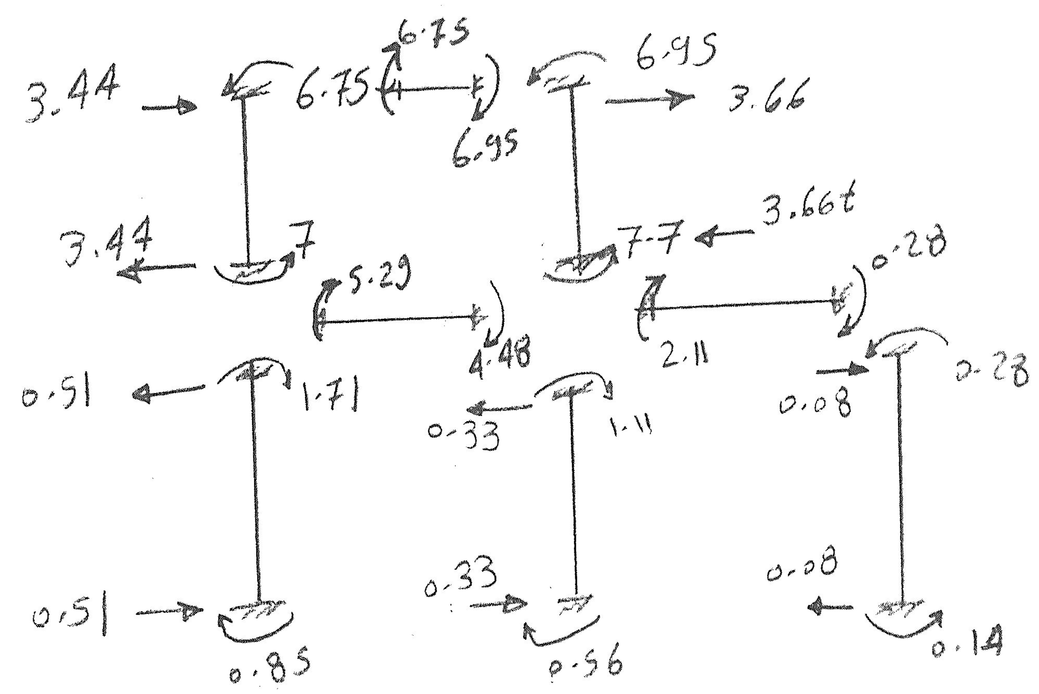

$\longrightarrow F_{22} = 7.10\ t$

| | | |

$$F_{10} + K_1 F_{11} + K_2 F_{12} = 0$$
$$F_{20} + K_1 F_{21} + K_2 F_{22} = 0$$

$\xrightarrow{+}$

$$-9.66 + K_1 (15.15) + K_2 (-7.86) = 0$$
$$-5.20 + K_1 (-7.76) + K_2 (7.10) = 0$$

$K_1 = 2.35$, $K_2 = 3.30$

$$\boxed{M_{final} = M_{N.S.} + 2.35\, M_{S_1'} + 3.30\, M_{S_2'}}$$

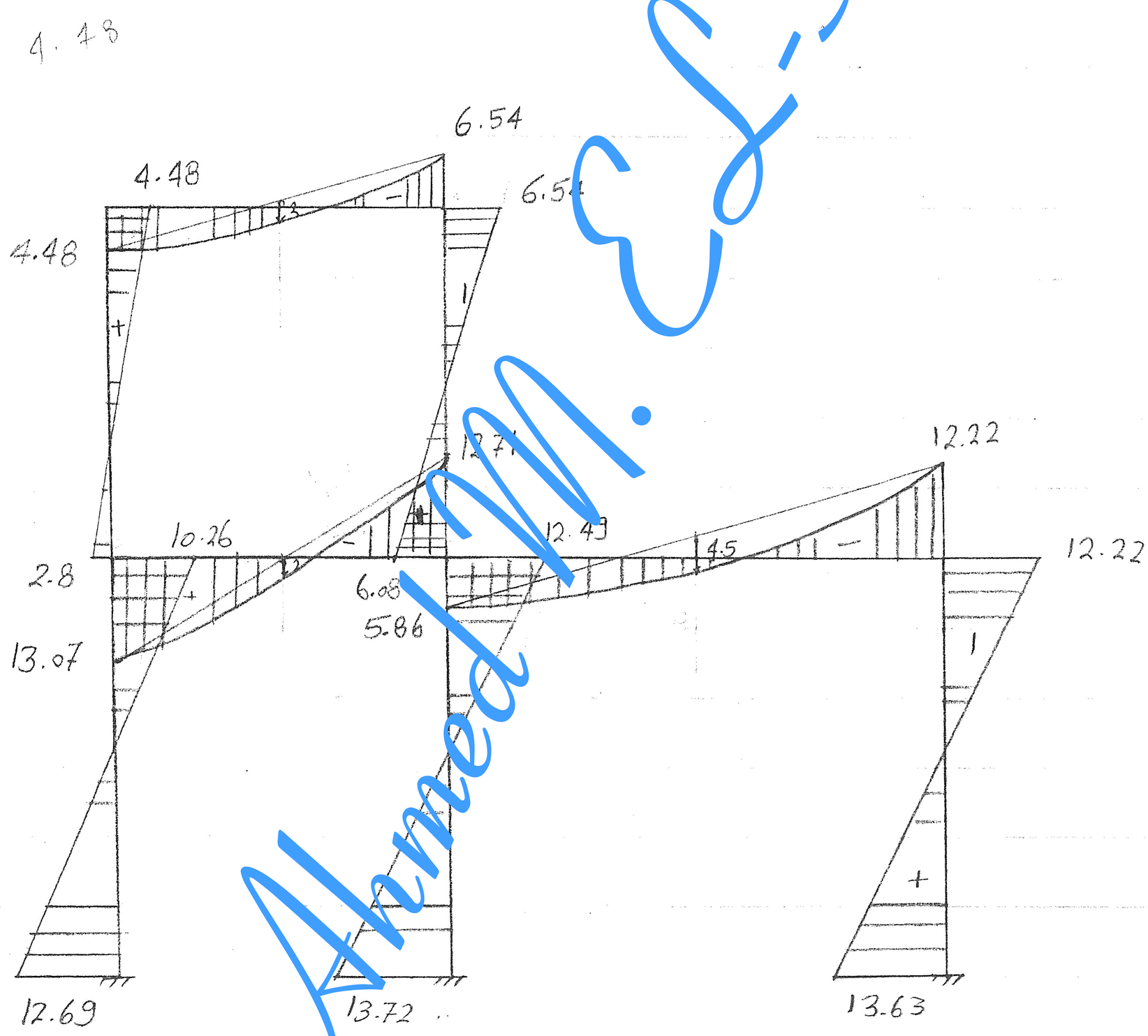

B.M.D.

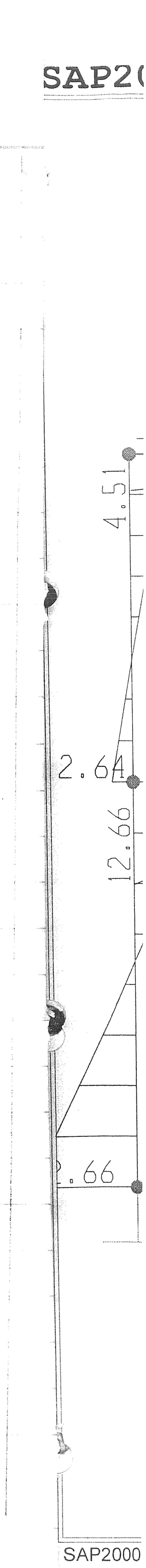

SAP2000

Ahmed M. El-Kholy

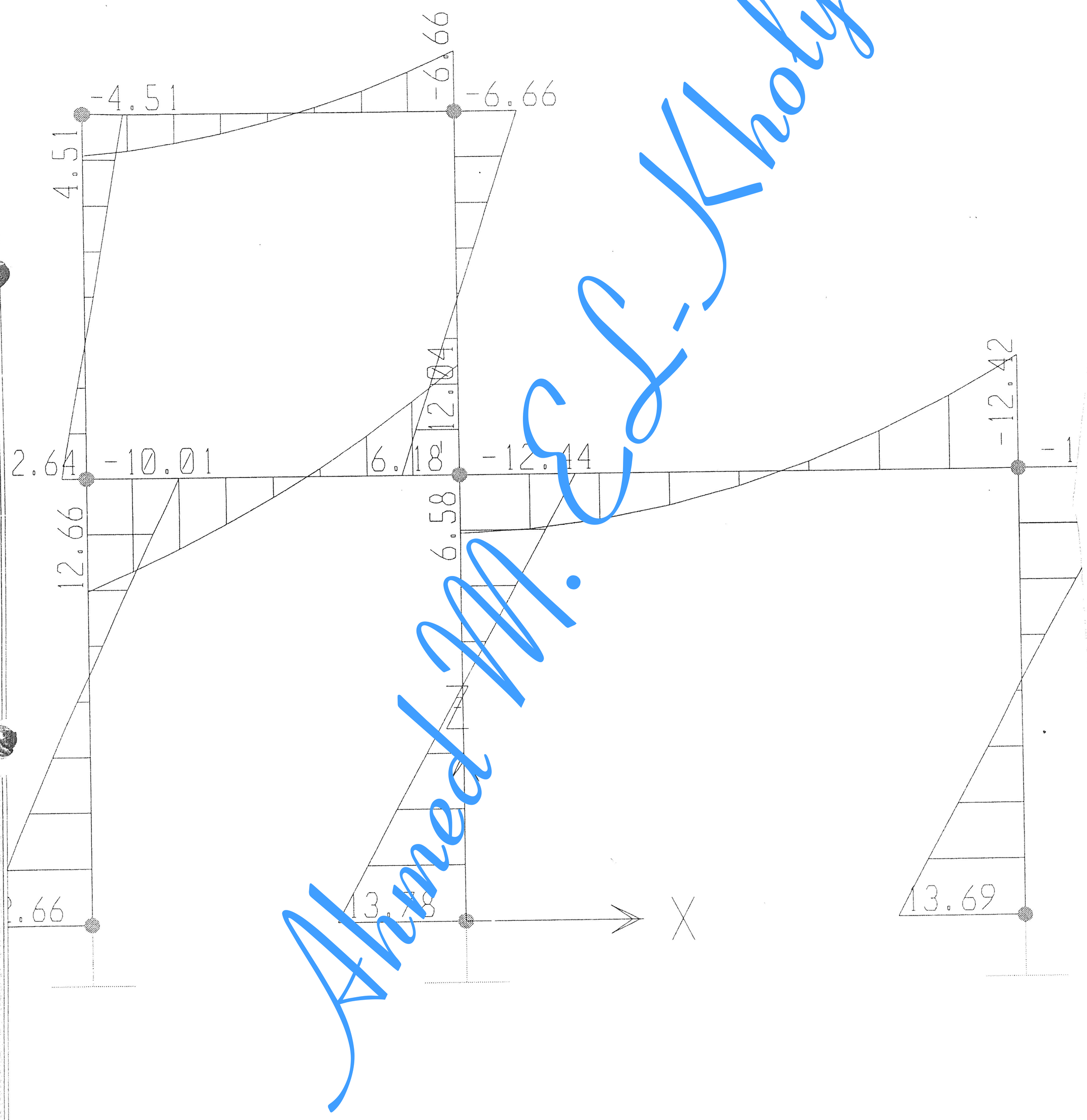

Ahmed M. El-Kholy

SAP2000 v6.11 - File:QGsheet2 - Moment 3-3 Diagram (LOAD1) - Ton-m Units